Accessories - TEC- X4

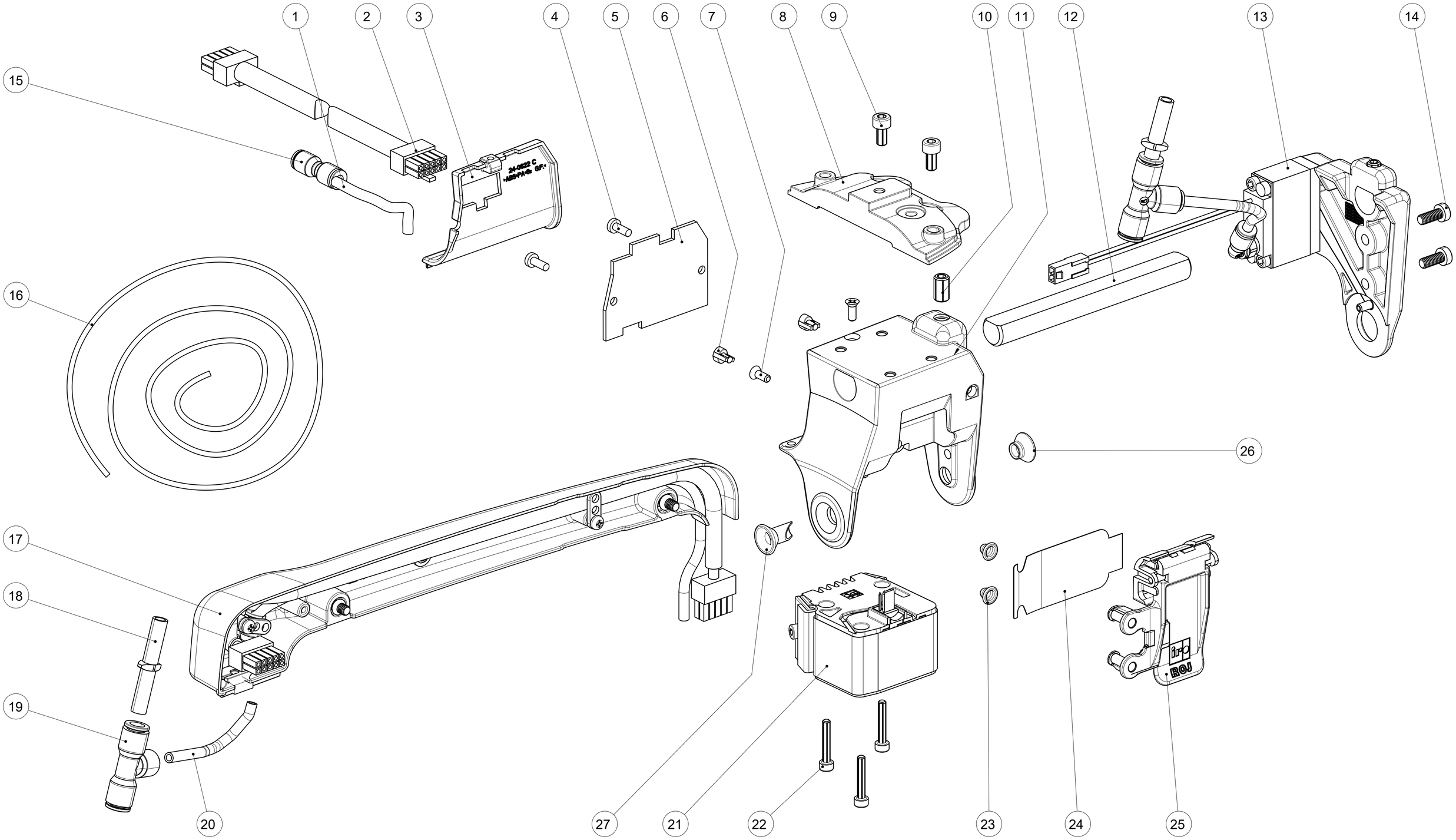

Ref.No.24-897S-2001-04/2623

Accessories - CAT - X4

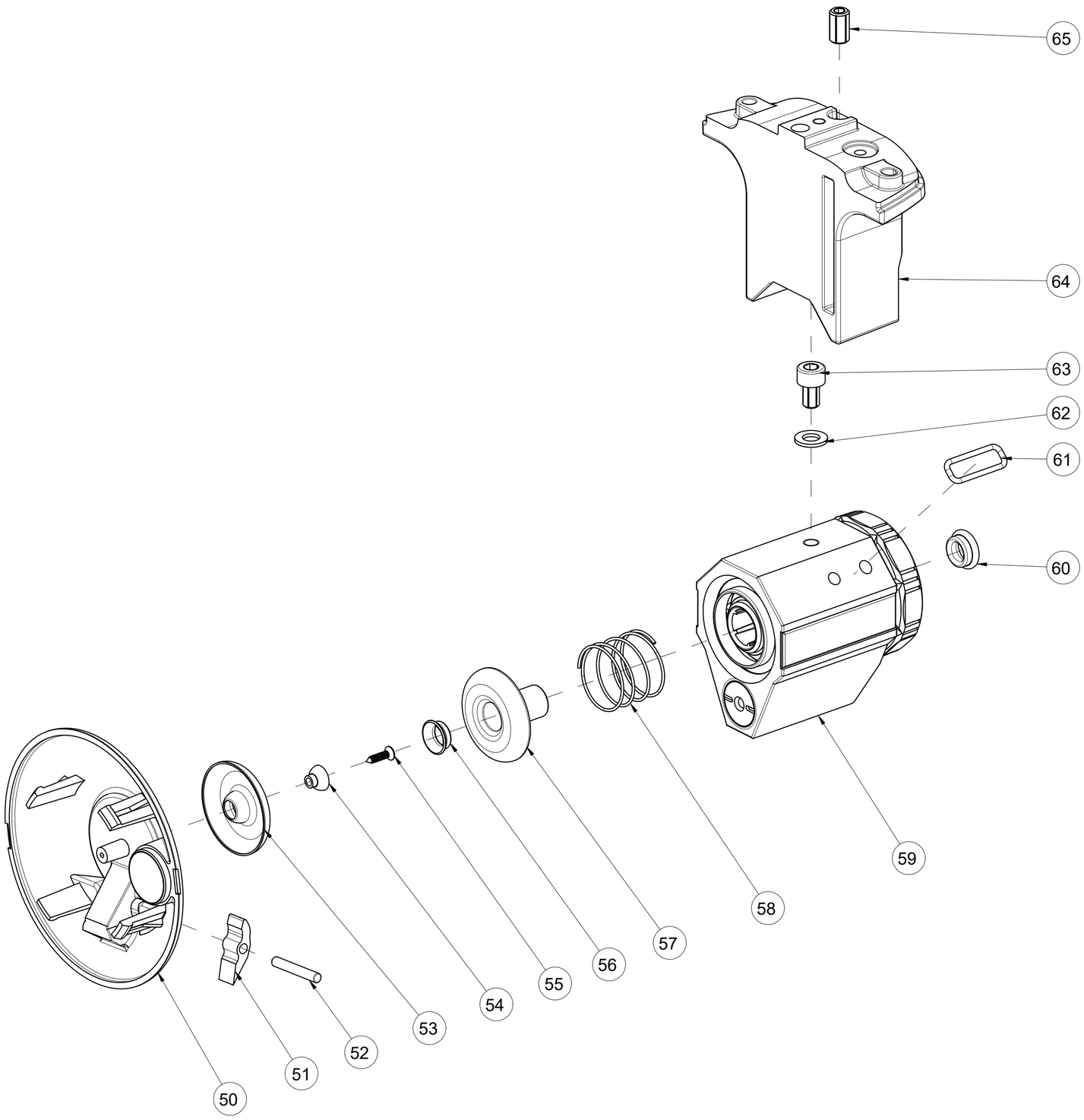

Ref. No. 24-897S-2001-04/2623

Accessories - ATC-W - X4

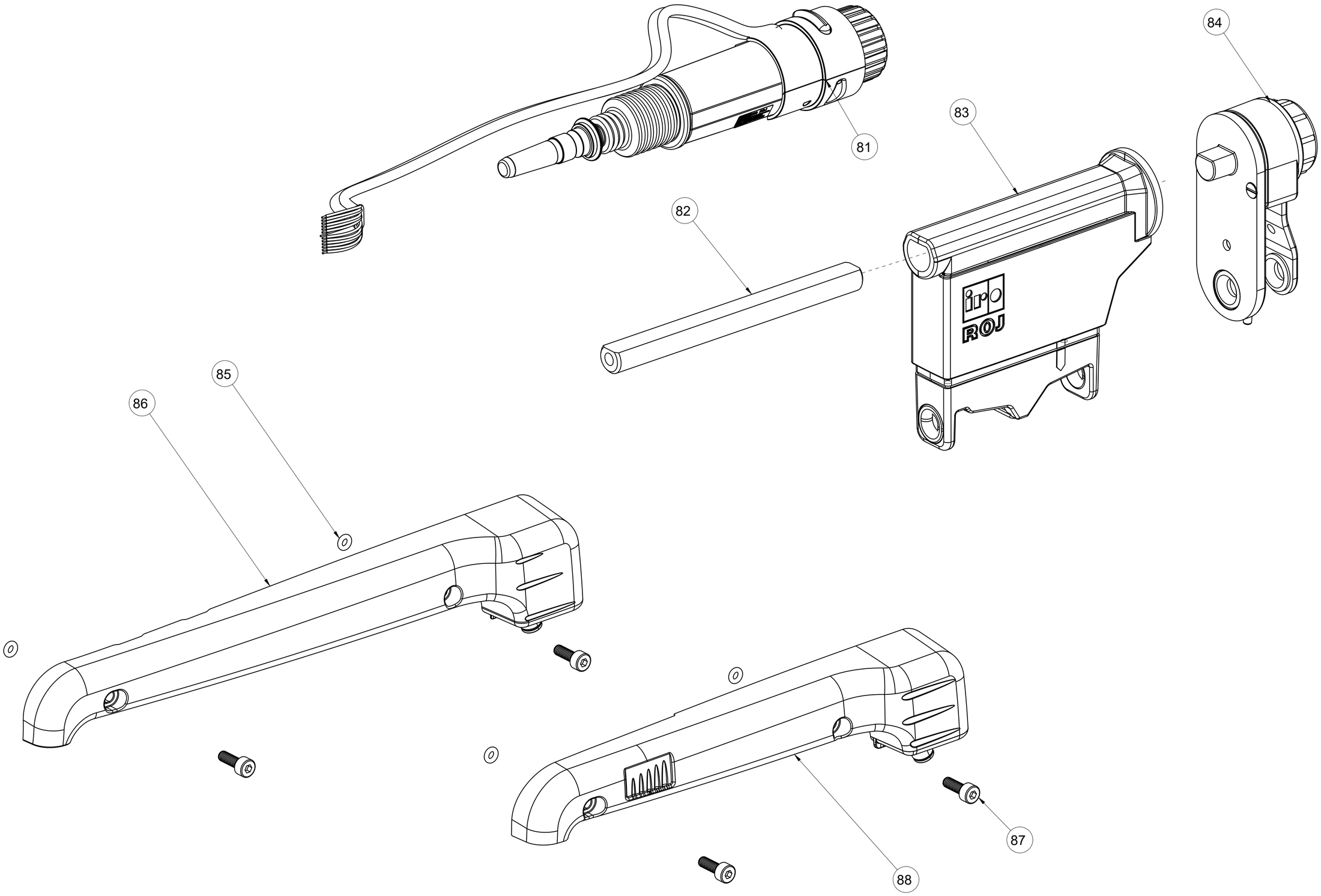

Ref. No. 24-897S-2001-04/2623

Update: Pos.2, part no. 40-0468-001, 05R01206 & 05R01301 deleted. Pos. 17, info. text updated. Pos. 21, part no. 40-0460-012, magnet with DLC-coated leaf deleted. Pos. 24, part no. 40-0440-115 DLC-coated leaf deleted.

TEC	**Tension Electrical Controlled**		
POS	PART NO	DESCRIPTION	REMARKS
1	40-0465-018	AIR TUBE	For central air cleaning
2	40-0513	CABLE	For Picanol Qikmate
3	40-0436	COVER	Connected to Picanol Qikmate
3	24-0622	COVER	Connected to feeder
4	900-0175	SCREW	Connected to Picanol Qikmate
4	900-0630	SCREW	Connected to feeder
5	40-0461	COVER	Connected to Picanol Qikmate
5	09E01088	TEC CIRCUIT BOARD	Connected to feeder
6	24-0623	SPACER	Connected to feeder
7	900-0622	SCREW	
8	24-0626-000L	NOSE SPACER	
9	900-0117	SCREW	
10	900-0495	SCREW	
11	40-0464-020L	HOUSE ASSEMBLY	Connected to Picanol box
11	40-0464-010L	HOUSE ASSEMBLY	Connected to feeder
12	40-0070-006	ROD	When rod mounted TEC
13	40-0545-006L	PNEUMATIC CLEANING UNIT COMPL	Incl. pos. 14
14	900-0534	SCREW	
15	900-9386	AIR CONNECTOR	For central air cleaning
16	40-0465-005	AIR TUBE	
17	24-0652-002	CABLE CHANNEL COMPL	For feeder connection, Chrono X4
17	27-0893-002	CABLE CHANNEL COMPL	For feeder connection, Luna X4
18	900-9399	CONNECTOR	
19	900-9398	CONNECTOR	
20	40-0465-015	AIR TUBE	For rod mounted TEC
21	40-0460-001	MAGNET COMPL	27 Ohm. For Picanol Qikmate
21	40-0460-002	MAGNET COMPL	7 Ohm. For connection to feeder
22	900-0527	SCREW	
23	40-0645	PROTECTIVE CAP	
24	40-0440	LEAF	T = 0,20 mm
24	40-0440-015	LEAF	T = 0,15 mm
24	40-0440-010	LEAF	T = 0,10 mm
24	40-0467	LEAF	Heavy Duty
25	40-0463	LEVER ASSEMBLY	
26	40-0458	CERAMIC EYELET	Standard
26	40-0458-001	CERAMIC EYELET	Polished
27	40-0553	CERAMIC EYELET	Standard
27	40-0553-001	CERAMIC EYELET	Polished

IRO AB RESERVE THE RIGHT TO CHANGE THE CONTENTS WITHOUT PRIOR NOTIFICATION.

CAT	Controlled Accelerate Tensioner		
POS	PART NO	DESCRIPTION	REMARKS
50	24-0759-001L	CAT COMPL	Chromed. Chrono X4. Incl. pos. 51-65
50	24-0759-002L	CAT COMPL	Plasma coated. Chrono X4. Incl. pos.51-65
50	24-0759-011L	CAT COMPL	Chromed. Luna X4. Incl. pos. 51-65
50	24-0759-012L	CAT COMPL	Plasma coated. Luna X4. Incl. pos.51-65
50	27-0328	CAT CONE COMPL	
50	27-0328-002	CAT CONE COMPL	Plasma coated
51	107-5216	LEVER	
52	900-3079	PIN	
53	107-5214	TENSIONER DISC	
53	107-5386	TENSIONER DISC	Plasma coated
54	107-5215	COLLAR	
55	900-0424	SCREW	
56	107-5285	CERAMIC EYELET	
56	107-5285-001	CERAMIC EYELET	Polished
57	107-5284-002	TENSIONER DISC WITH CERAMIC	
57	107-5284-003	TENSIONER DISC WITH CERAMIC	Polished eyelet
57	107-5284-012	TENSIONER DISC WITH CERAMIC	Plasma coated
57	107-5284-013	TENSIONER DISC WITH CERAMIC	Plasma coated & polished eyelet
58	107-5192-001	SPRING MEDIUM	
58	107-5192-002	SPRING STIFF	
58	107-5192-004	SPRING SOFT	
59	107-5268-010L	CAT HOUSING	Chromed, std. eyelet
59	107-5268-110L	CAT HOUSING	Plasma coated, std. eyelet
59	107-5268-011L	CAT HOUSING	Chromed, polished eyelet
59	107-5268-111L	CAT HOUSING	Plasma coated, polished eyelet
60	900-6101	CERAMIC EYELET	
60	900-6101-001	CERAMIC EYELET	Polished
61	900-9306	O-RING	
62	900-2025	WASHER	
63	900-0231	SCREW	
64	24-0884-001L	CAT NOSE	Chrono X4
64	27-0929-001L	CAT NOSE	Luna X4
65	900-0495	SCREW	

IRO AB RESERVE THE RIGHT TO CHANGE THE CONTENTS WITHOUT PRIOR NOTIFICATION.

ATC-W	**Automatic Tension Control**		
POS	PART NO	DESCRIPTION	REMARKS
81	40-0887	MOTOR MODULE COMPLETE	Chrono X4 / Luna X4
82	40-0070-010	ROD	
83	54R00463	SENSOR ATC X4	
84	40-0500-004	OUTPUT COMPENSATOR	
85	900-9355	O-RING	
86	24-0652-001	CABLE CHANNEL COMPL	Chrono X4. Incl. pos. 85, 87
87	900-0218	SCREW	
88	27-0893-001	CABLE CHANNEL COMPL	Luna X4. Incl. pos. 85, 87

IRO AB RESERVE THE RIGHT TO CHANGE THE CONTENTS WITHOUT PRIOR NOTIFICATION.