VANDEWIELE

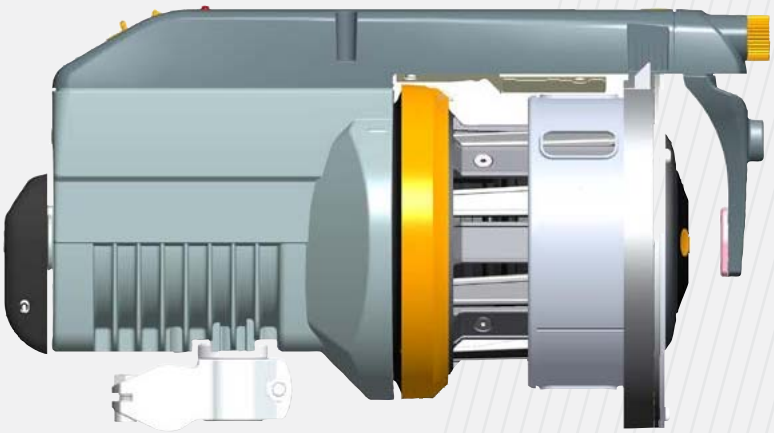

Ref. no. 24-893M-2101-01/1622

Operating Instructions

EN |

VdW X3

Original language instruction

Warnings 3
Technical Specifications 4
Mains connection..... 5
Connections..... 6
Operating diagram..... 7
Connections power supply 8-9
Jumpers..... 10
Main parts..... 11
S/Z Adjustment 12
Threading - pneumatic and manual..... 13
Sensor adjustment 14
Assembly instructions..... 15
Tensioners: Brush/ Flex Brake..... 16
Tensioners: Balloon adjustment..... 17
Maintenance 18-19
Fault finding 20
Declaration of conformity..... 21

This section contains important safety information. Read the manual carefully before installing, using or maintaining the weft feeder.

WARNING

Indicates a possible dangerous situation which could result in serious injury or damage to the unit.

CAUTION

Indicates a possible dangerous situation which could result in minor/moderate injury or damage to the unit.

NOTE

Used in order to draw attention to important information, which facilitates operation or handling.

IRO AB reserve the right to change the contents of the user's guide and technical specifications without prior notification.

WARNING!

- The power supply must be switched off at the mains before any work is carried out on the feeder, the transformer or any other electrical components. The feeder and the transformer cabinet and cable covers must be fully assembled before the power supply is connected.
- The weft feeder ON/OFF-switch does not cut off the main power supply. Turn off the main switch before any work is carried out on the electrical circuit.
- The feeder and transformer contain electrical components that retain an electric current up to three minutes after disconnection
- All work on electrical components must be carried out by a qualified electrician.
- This product is not intended for use in potentially explosive atmospheres or in zones classified according to the european directive 94/9/ec. Please contact IRO AB if products for use in a potentially explosive atmosphere are required.
- Always turn off the main switch or isolate the power supply and disconnect the air supply before connecting or disconnecting the feeder, the control board or any of the circuit boards
- Routine checks for damaged or worn parts must be made before operating this equipment. Any part that is worn or damaged should be properly repaired or replaced by authorized personnel. To avoid risk of injury DO NOT operate this equipment if any component does not appear to be functioning correctly.

CAUTION!

- Caution must be taken in the close vicinity of the feeder as it contains moving parts that can cause injuries and, in normal operation, starts without prior warning.
- To comply with C.E. Regulations only replacement parts approved by IRO AB may be used.
- The feeder is an industrial product and therefore not approved to use household environments /in residential areas.

NOTE

- To ensure the selection of the most suitable feeder and associated accessories, it is recommended making weaving tests with the intended yarns.
- Please dispose of obsolete or unwanted equipment responsibly, taking into consideration any local regulations regarding the disposal and / or recycling of materials that are applicable.
- All products in this manual may not be available for your market.

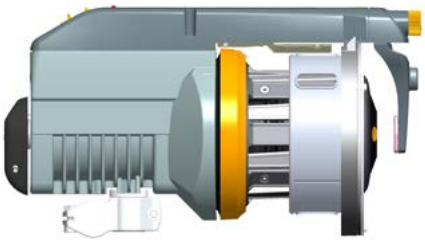

m/min	Max 1600 m/min
kg	11.5 kg
	Min 5° C - Max 40° C
	RH max 95 %
	Sound pressure L_{pa} 67.1 dB (A), Sound power L_{wa} 79.5 dB (A)
	Ø max 11 mm
P	Input air pressure 5,5 - 7 bar
	Max 4 mm

Voltage supply box	
	380V-480V 2900 VA
Fuse	Max T 10A
kg	45 kg

NOTE

Subject to technical modifications.

NOTE

Condensation can form on the weft feeder when it is moved from the cold environment of the warehouse to the warmer environment of the loom room. Make sure that the feeder is dry before switching it on.

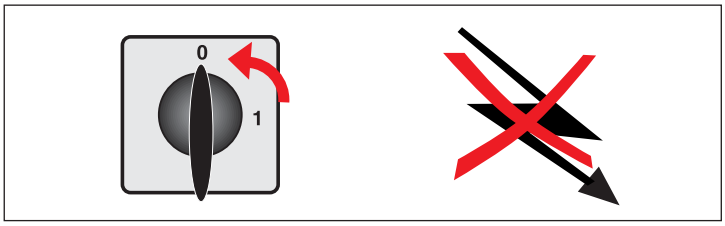

WARNING!

Turn off the main switch before any work is carried out on the electrical circuit.

NOTE

Make sure that the cable covers are tight.

Take the voltage supply box out of the packing. Open the cover and connect the three-phase power cord. (4-wires cable). Make sure that the earth connection is properly made The section of each wire cannot be less than 1,5 mm².

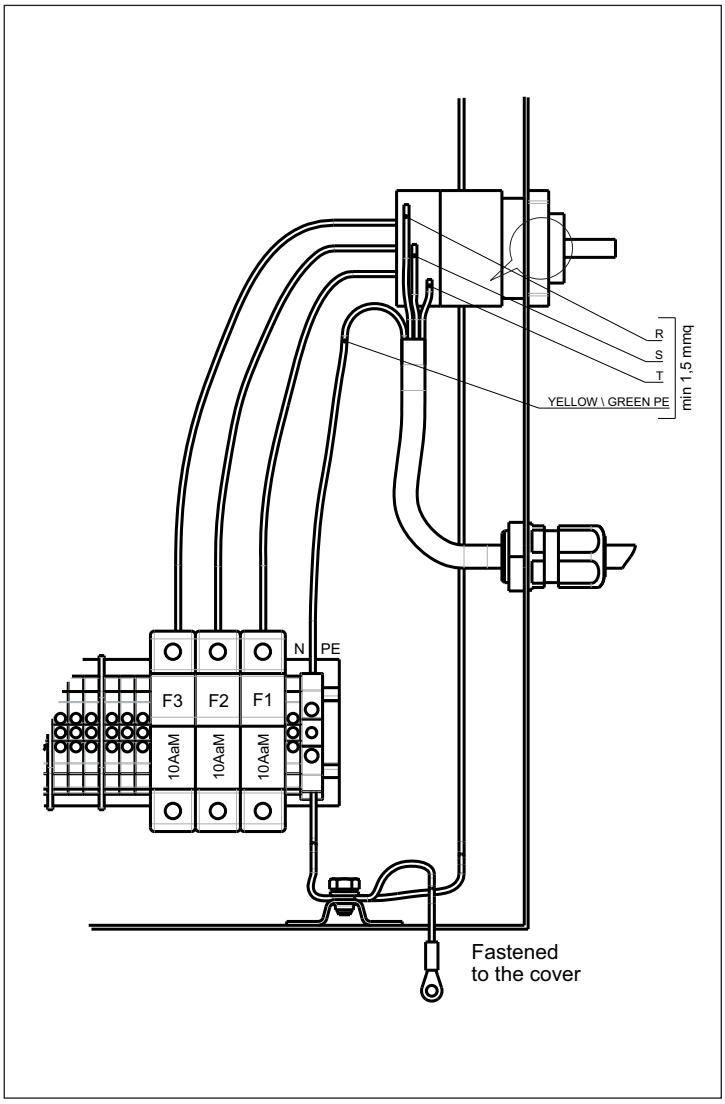

380 V

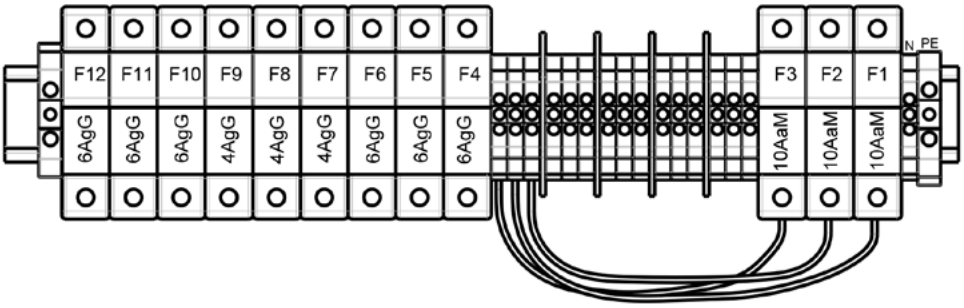

400 V

PRESET

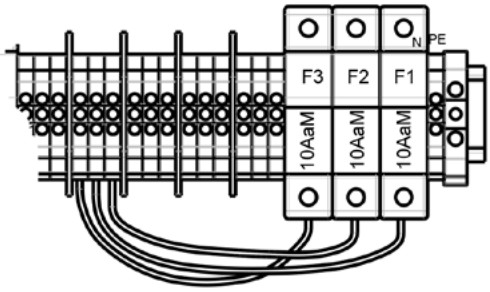

415 V

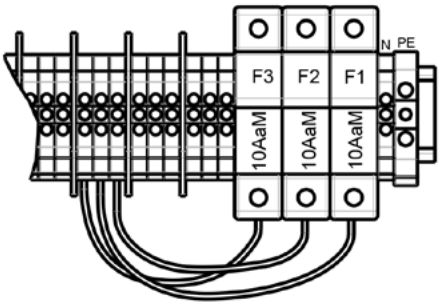

440 V

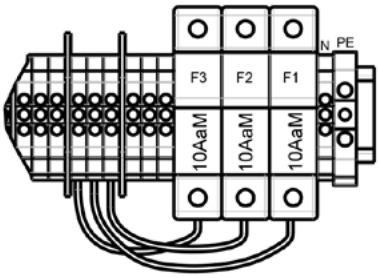

480 V

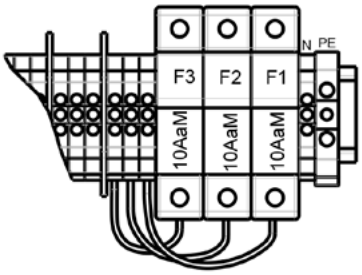

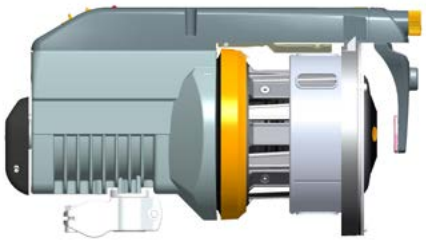

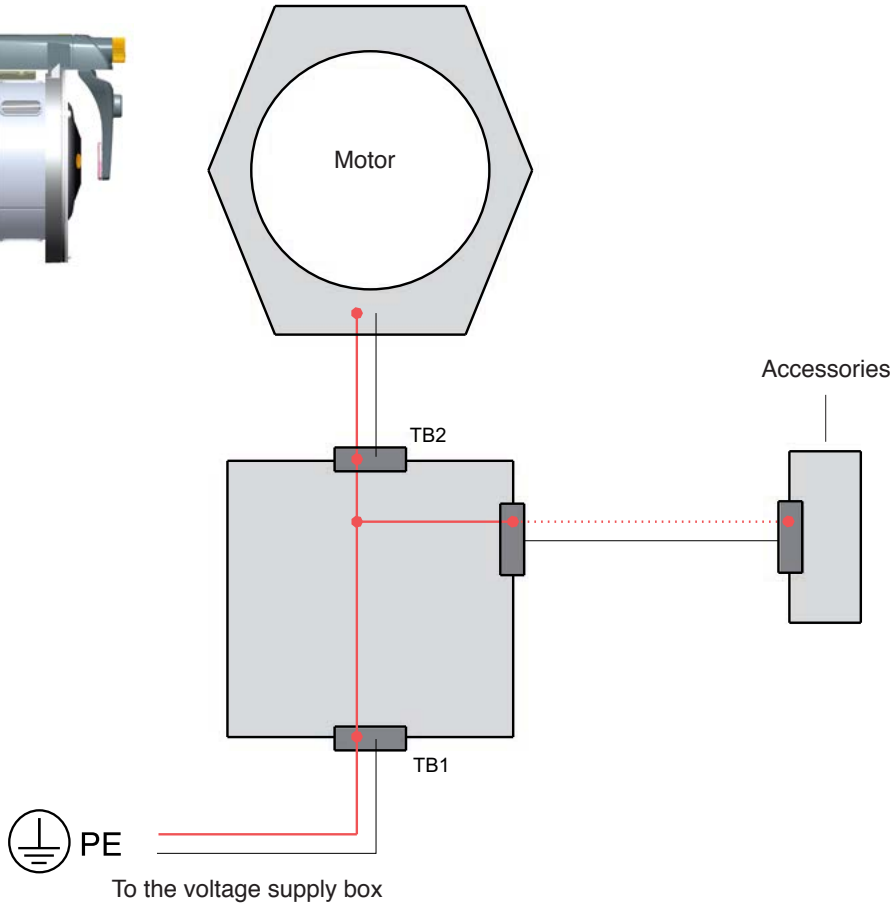
Motor
Accessories
TB2
TB1
PE
To the voltage supply box

Connect the feeders' cable to the voltage supply box by following the numeric correspondence to the color selector's needles (feeder working with the weft threaded in the needle 1 must be connected to the position 1 of the voltage supply box; etc.).
Connect the signal cable coming from the voltage supply box to the loom.

Connect the plug of the 3-phase power cord to the socket available to the loom panel.

WARNING

It is necessary to use an X3 voltage supply box suitable for higher power consumption. Where not otherwise indicated, DIP 1, 2, 3, 4 = 0 (off)

VdW X3 CAN - 1 to 5 feeders

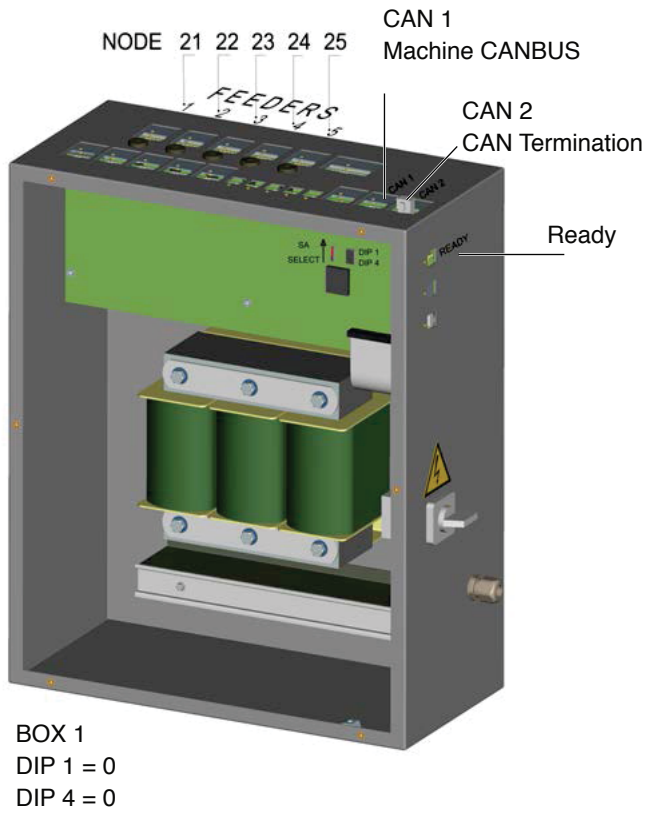

VdW X3 CAN - More than 5 feeders

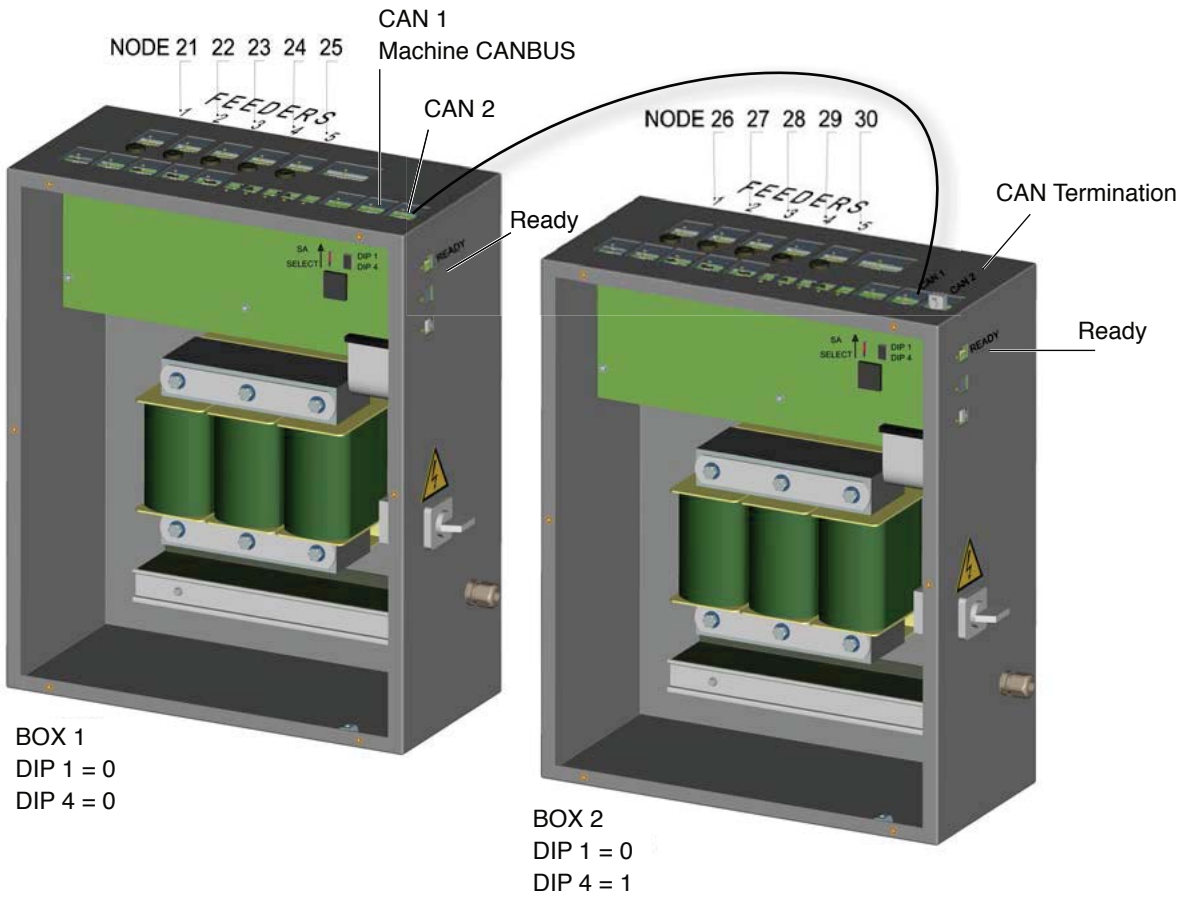

VdW X3 CAN - as replacement of X2 voltage supply box

DIP 1 = 1
DIP 2 = 0

DIP 1 = 0
DIP 4 = 0

NODE 25 26 27 28 (29)
NODE 21 22 23 24 (25)

Ready

Just set DIP1 and DIP 4 the same way as in the replaced X2.

VdW X3 STAND ALONE

- Old machines
- Individual stop
- Relays connections

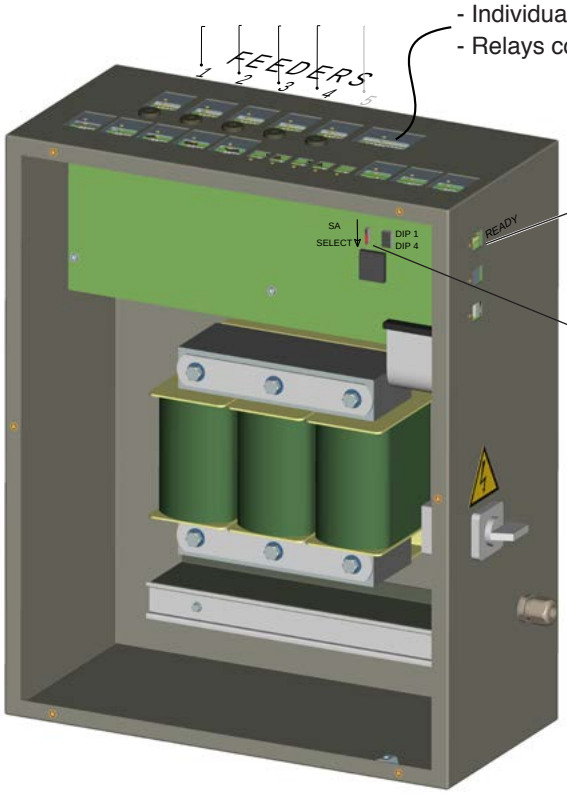

Ready

Move the SA SELECT downwards towards the microcontroller

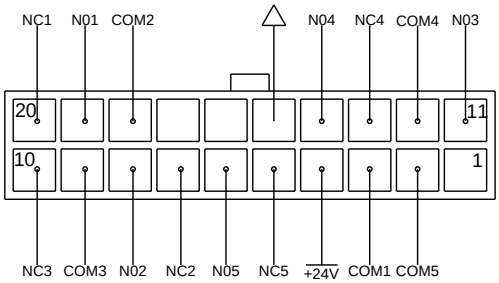

The feeder is equipped with jumpers on the motor circuit board that adapt the feeders operation to the characteristics of the weaving process. (Weaving machine settings have priority over jumper settings).

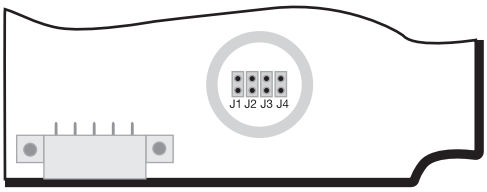

J1		Yarn store sensor sensitivity- LOW
J1		Yarn store sensor sensitivity- AUTO
J2		Integrated yarn break sensor- DISABLE
J2		Integrated yarn break sensor- ENABLE
J3		Winding disc positioning- DISABLE (ONE WAY BEARING)
J3		Winding disc positioning- ENABLE
J4		Pattern in advance- DISABLED
J4		Pattern in advance- ENABLED

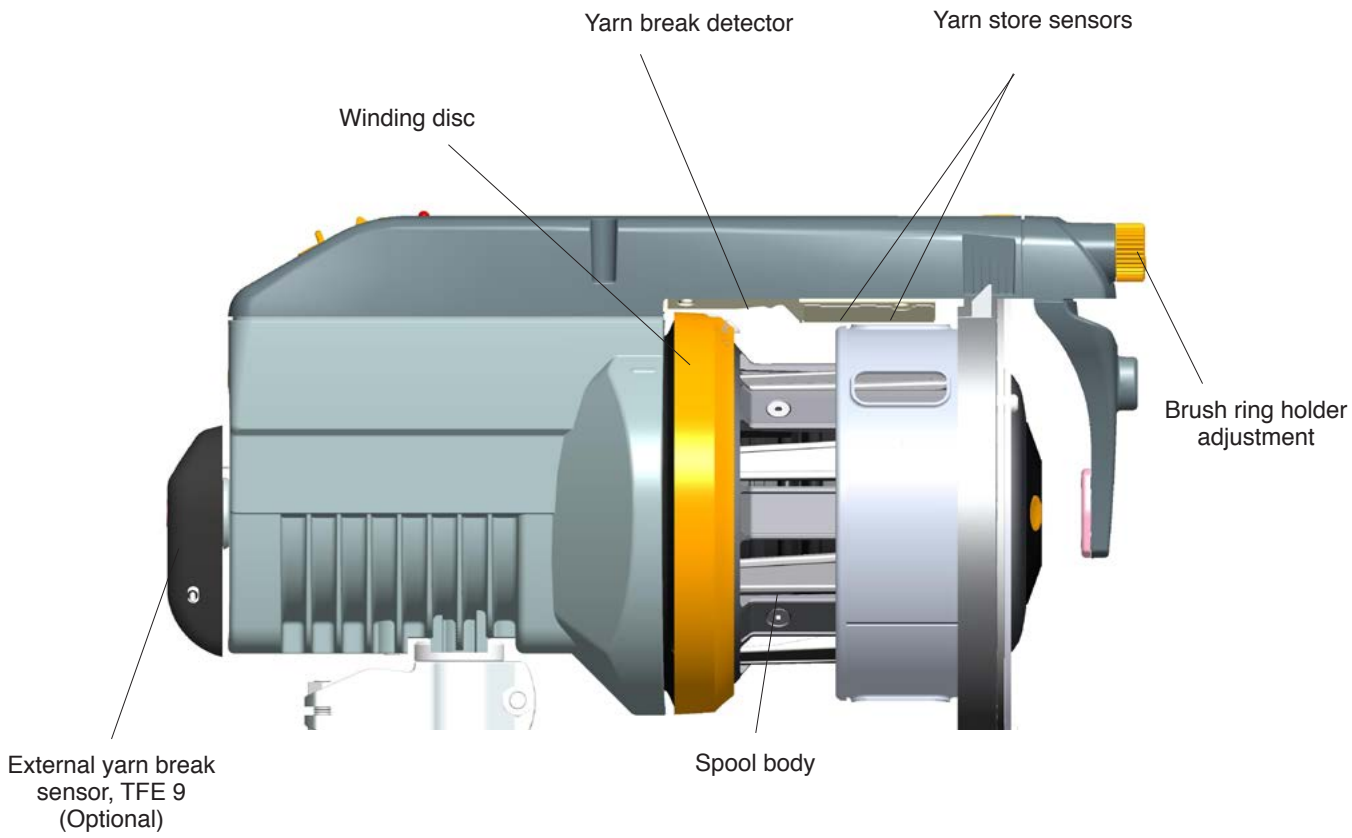
Yarn break detector
Yarn store sensors
Winding disc
Brush ring holder adjustment
External yarn break sensor, TFE 9 (Optional)
Spool body


Indicator
ON/OFF Switch
S/Z Switch
Half threading

Switch off the feeder.

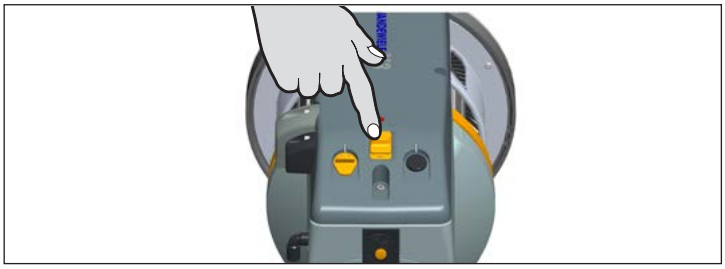

Grip the winding disc (1) and, whilst pressing the orange button on the front of the spool body (2), rotate the disc until the button is felt to locate. Aligning the mark on the winding disc with the line on the motor house gives the zero separation position.

To adjust, press in the button and revolve the winding disc in the appropriate direction.

Set the direction of rotation with the switch.
(The feeder is deactivated in the standby position (0))

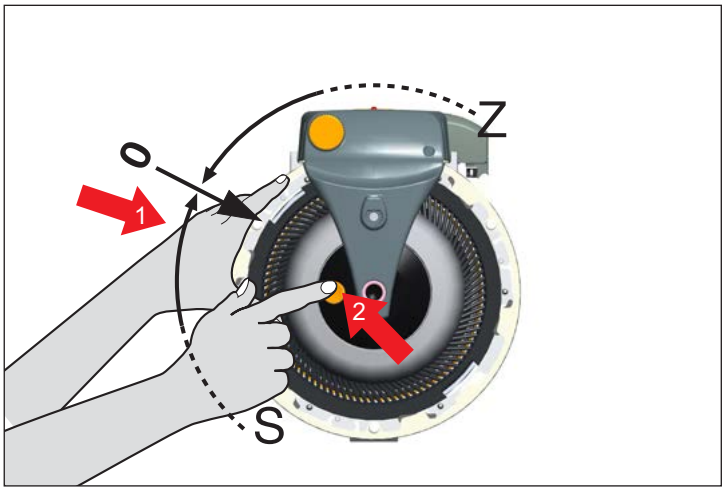

The separation must be distinct, but not excessive.

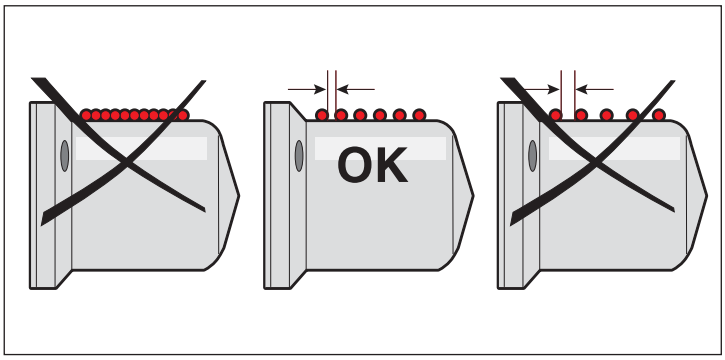

Switch on the feeder.
The winding disc will automatically position itself (empty spool body).

HALF THREADING

Insert the yarn into the eyelet and press the button, whilst lightly holding the yarn.

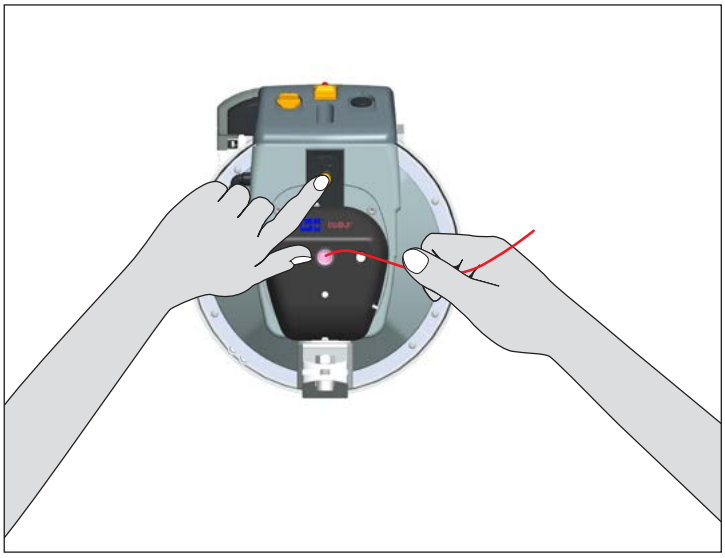

MANUAL THREADING

1. Align the winding disc eyelet (1).
2. Open the brush holder (see page 36).
3. Thread the needle all the way through the feeder and output eyelet.
4. Pull the yarn through.
5. Restart the feeder.

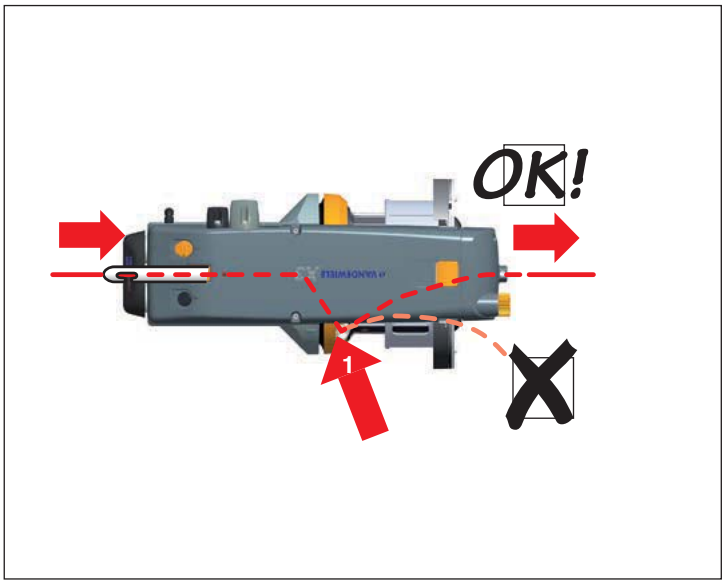

WARNING

When using a threading needle, care must be taken to avoid damaging the Flex Brake. Ensure that the flex holder is in the forward position before threading.

Certain yarn types may stick to, or leave deposits on, the sensor mirror. In such cases the clearance between the yarn and the mirror can be increased.

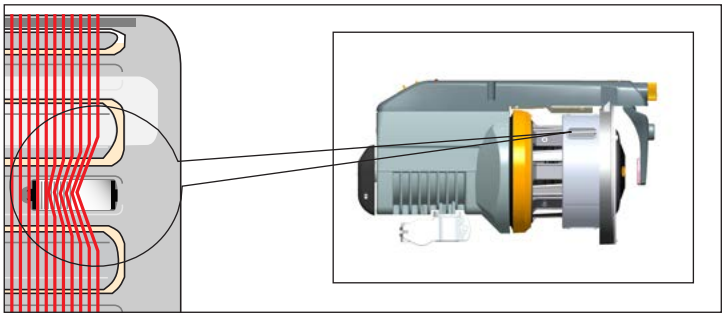

Adjust the clearance by rotating the mirror 180 degrees.

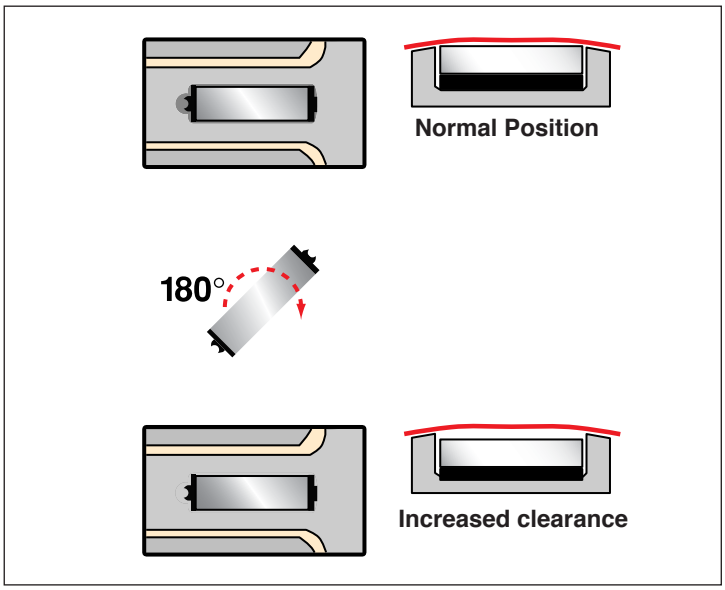

For all those cases where spoolbody disassembling is required, it is then necessary to reinstall it part by part to avoid damaging the parts. Secure the bellow properly with plastic straps (1).

Be sure that the carrier pin fits into the keygroove in the motor shaft (2).

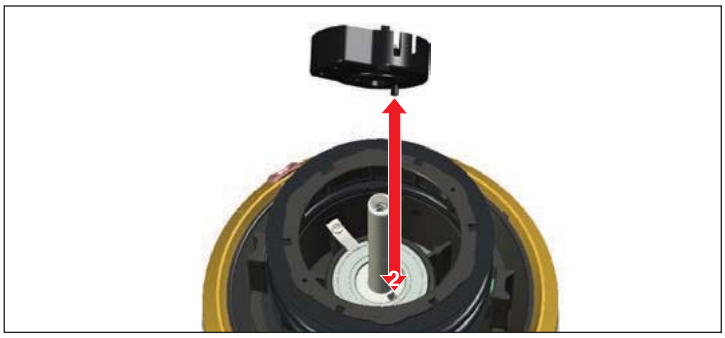

Insert the two screws for the rubber bellows (3) and be sure they are properly tightened with the correct key. (Torx T10)

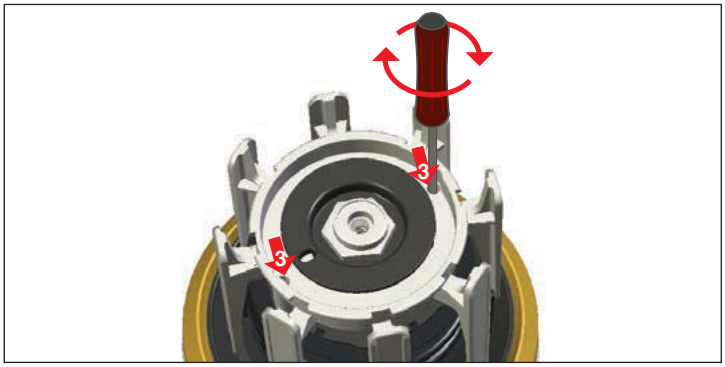

Turn the winding disc (4) when holding the centre nut (5) to get the balance weight in position. When correct, the disc can easily be moved 180° only.

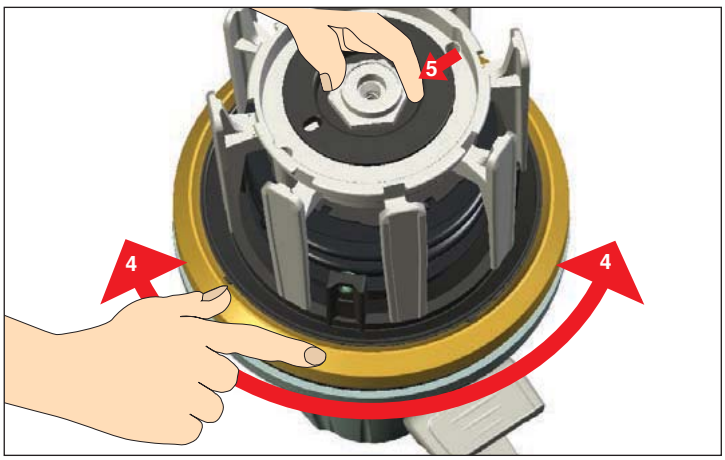

Install the centre screw, outer rubber bellows, spoolbody and cover. Set the yarn separation to a suitable position to be sure it is correctly assembled.

BRUSH / FLEX MOUNTING

Rotating the slide shift lever (1) will detach the brush from the spool body.

Ensure that the brush ring is correctly positioned (2).

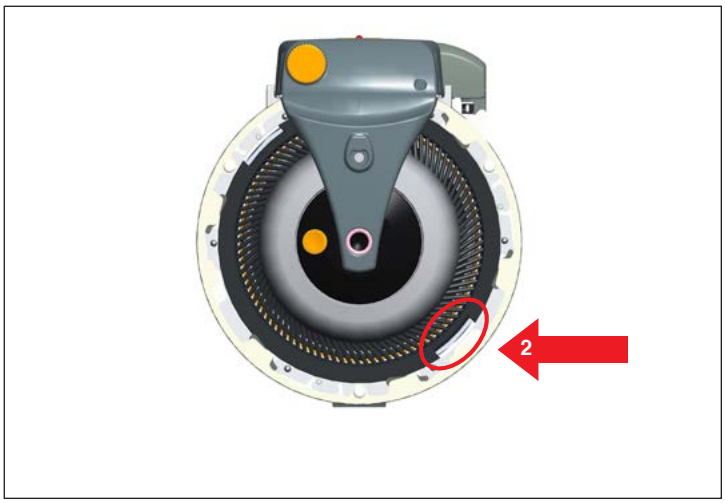

Balloon control adjustment.

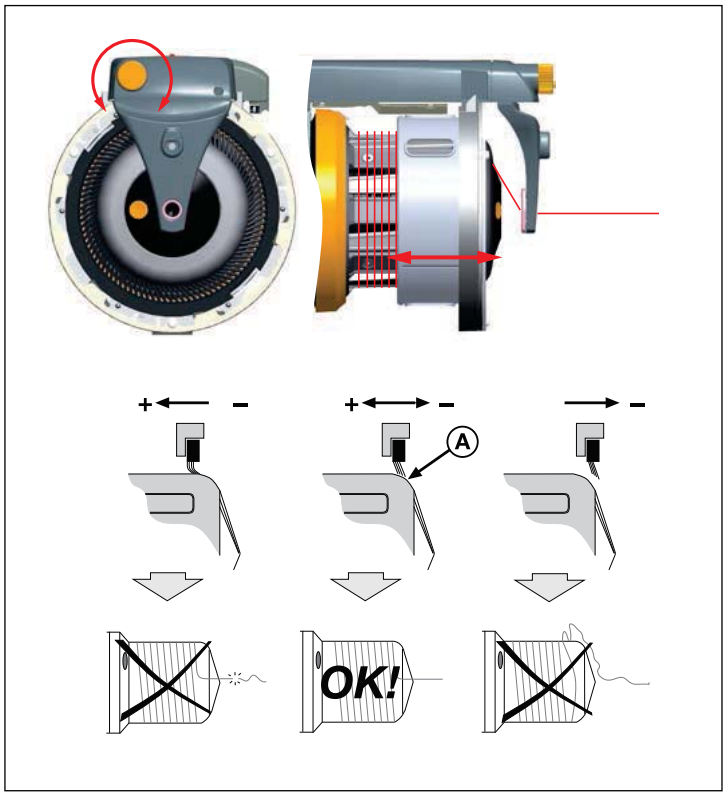

NOTE

Excessive brush tension will cause abnormal wear.

NOSE OUTPUT

Attach the nose output depending on the type of brake being used.
Flexbrake = 30°
Brush = 42°

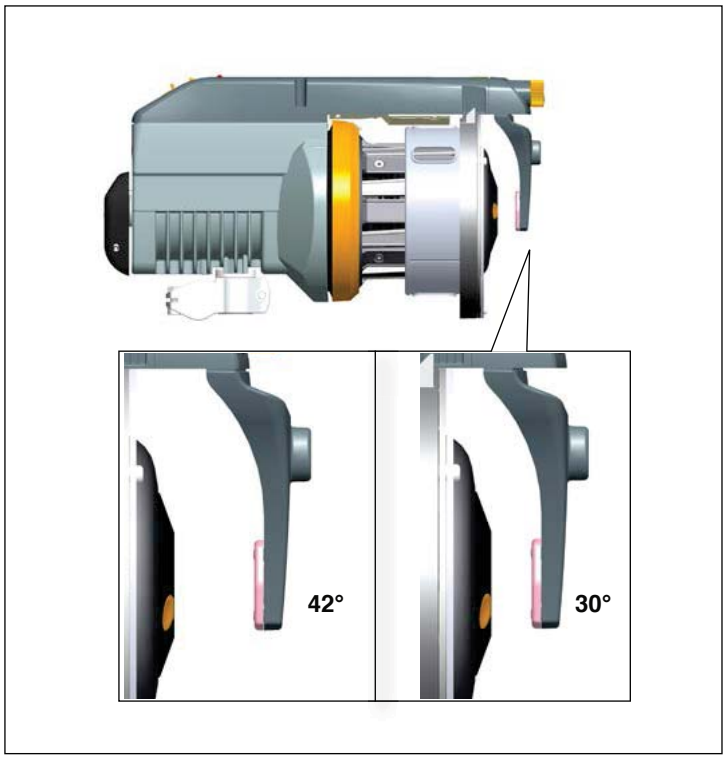

LUBRICATION

The unit requires no extra lubrication.

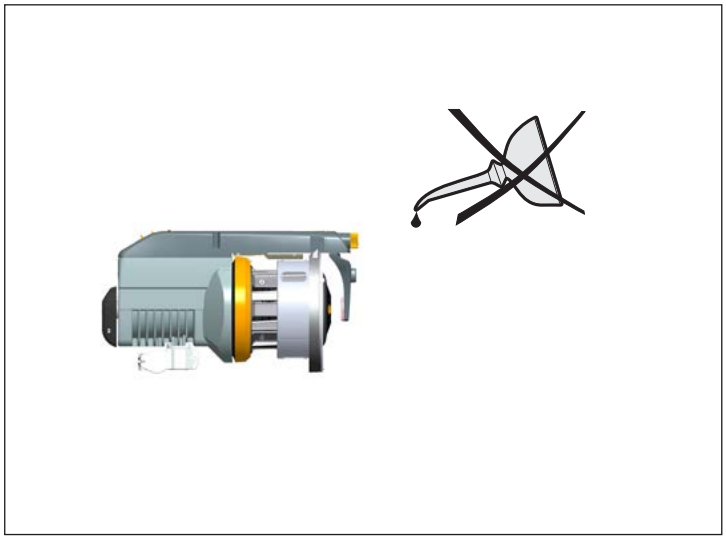

CONNECTIONS

WARNING

Always turn off the main switch or isolate the power supply and disconnect the air supply before connecting or disconnecting the feeder, the control board or any of the circuit boards.

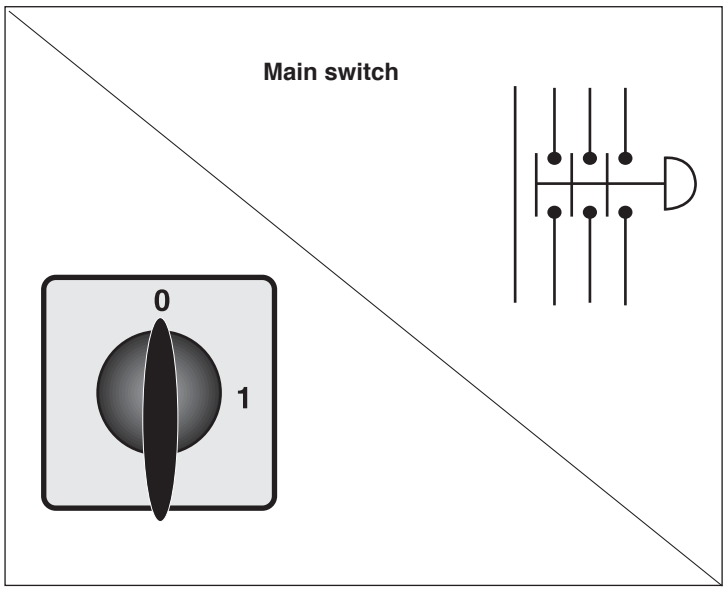

IRO/ ROJ TOOL KIT

It is recommended to use an IRO tool kit, with specialised tools, to ensure easy and correct disassembly/ assembly of IRO feeders during maintenance work. Please contact your local IRO service station for further information.

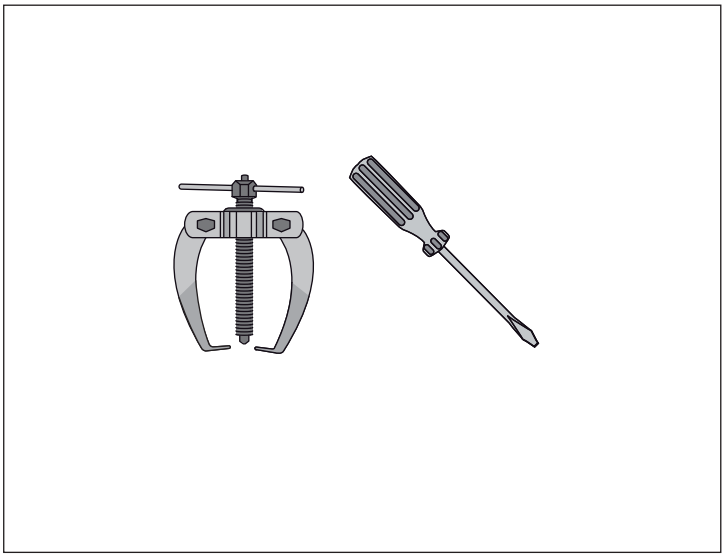

CLEANING

It is recommended to carry out a periodical cleaning of any lint or dust accumulation on the feeder or the voltage supply box.

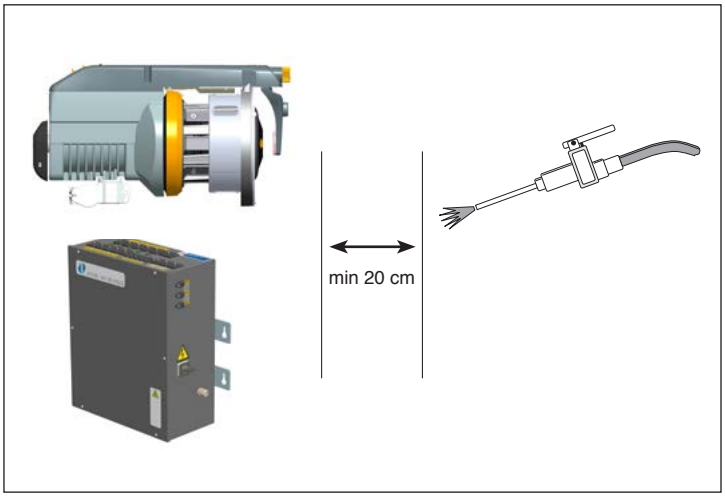

Cleaning the spool body

Remove the brush holder by pressing the button (1) on the top. Clean the spool body with compressed air.

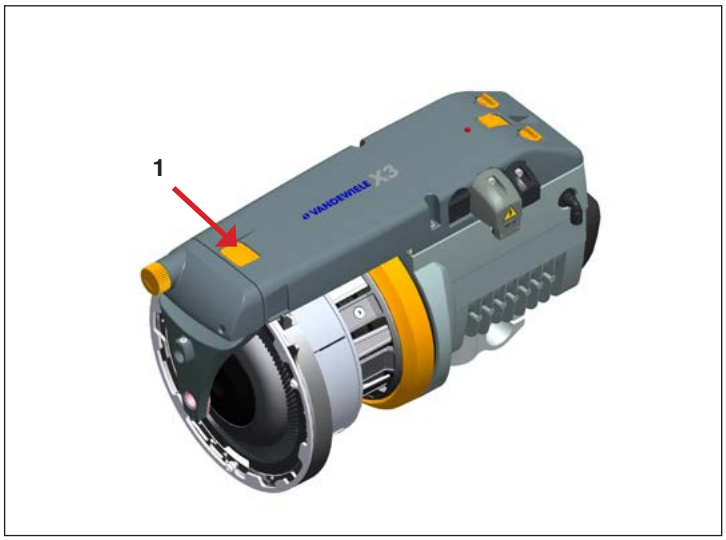

CAUTION

If the brushholder is completely removed it is important to clean the piston and it's seat (2) with compressed air to prevent dust to enter and disturb the normal piston movement.

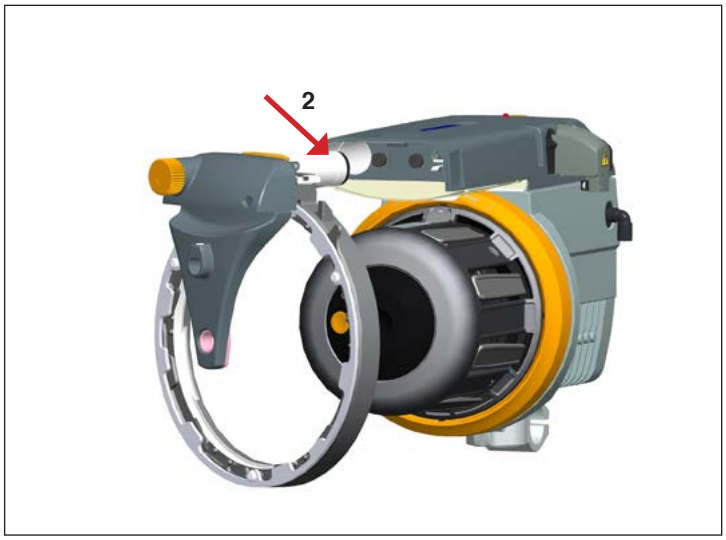

Fault	Check in the following order
Feeder will not start	1 - 2 - 3 - 4 - 6 - 7 - 8 - 24 - 25 - 26
Feeder will not stop	2 - 4 - 24 - 25
Low or empty yarn store	4 - 3 - 13 - 8 - 21 - 24 - 25 - 27 - 26
Input yarn breaks frequently	22 - 13
Output yarn breaks frequently	11 - 20 - 12 - 19 - 23
Fuses blow repeatedly	25 - 28
Feeder warning light flashes slowly	4
Feeder warning light flashes rapidly	3 - 8 - 27
Feeder warning light continously on	29

No	Possible causes	Remedies	See page
1.	Incorrect S/Z switch position	Set the S/Z switch in appropriate position	12
2.	Incorrect spoolbody position	Ensure the sensor unit is positioned upwards	14
3.	Winding disc jammed	Free and clean the winding disc	18-19
4.	Contaminated sensor or mirror	Clean the sensor and mirror using a mild cleaning agent	14
6.	Faulty cable connections	Check and rectify	5, 7, 8-9
7.	Fuses blown	Replace the relevant fuse	7, 8-9
8.	Mains supply / primary voltage fault	Check the mains supply and connections	5, 7, 8-9
11.	Insufficient balloon control	Increase the balloon control	17
12.	Excessive output tension	Reduce the output tension	17
13.	Excessive yarn separation	Reduce the yarn separation	12
19.	Insufficient yarn store	See “low or empty yarn store” under “fault”	-
20.	Damaged balloon control	Repair/replace all defective parts	16
21.	Stop signal fault between voltage supply box and weaving M/C	Check all connections/cable	10, 13-15
22.	Misalignment between the bobbin and the feeder	Realign the bobbin/feeder	-
23.	Misalignment between the feeder and the machine	Realign the feeder/machine	-
24.	Defect yarn store sensor unit	Replace the relevant sensor unit	11
25.	Defective motor circuit board	Replace the relevant circuit board	7
26.	Defective fuse panel	Replace the relevant fuse panel	7, 8-9
27.	Defective voltage supply box interface	Replace the relevant interface	7, 8-9
28.	Defective feeder connection cable	Replace the relevant connection cable	-
29.	Yarn break	Re-thread the feeder	13

EC DECLARATION OF CONFORMITY

IRO AB
Box 54
SE-523 22 Ulricehamn

Guarantee that machine type:

VdW X3

is manufactured in conformity with the provisions of the following
EC directives and applicable amendments:

Safety of machinery	2006/ 42/ EC	EN ISO 111 11-1
Low voltage equipment	2014/ 35/ EC	EN ISO 111 11-1
Electromagnetic compatility	2014/ 30/ EC	EN ISO 111 11-1

Pär Josefsson, Manager Product and Development department, 2016-05-27